Dimensions

MK/MKA

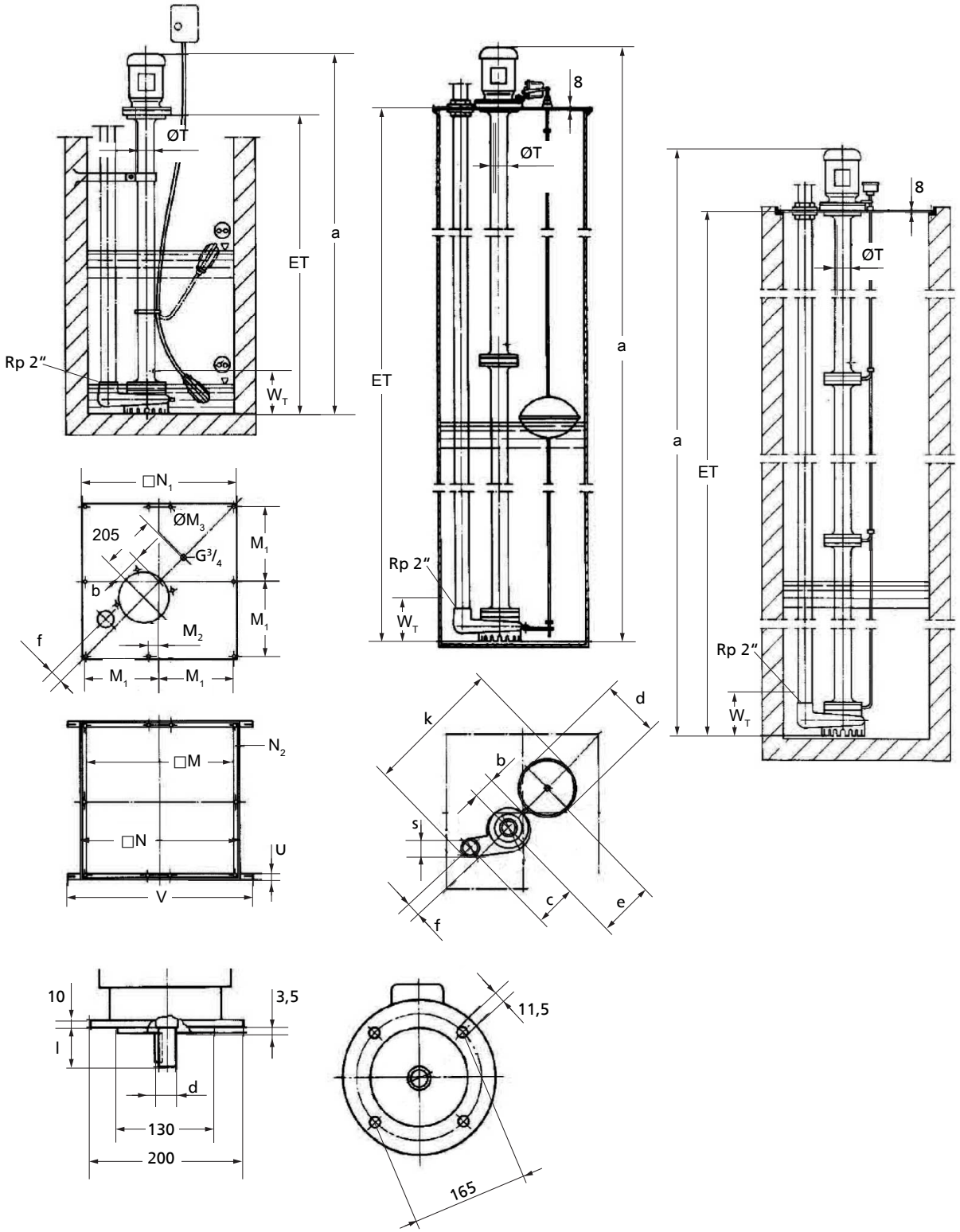

Dimensions

ET	Installation depth
W_T	Minimum level of fluid handled

Dimensions [mm]

MK / MKA	ET	W_T	a	b	c	d	e	f	k	□M	M_1	M_2	ØM_3	□N	□N_1	N_2	O	S	ØT	U	V
20-/100	1004	110	1271	65	155	240	205	46	520	500	263	33	10	560	550	30×20×4	8	65	71	20	660
20-/190	1911	110	2178	65	155	240	205	46	520	500	263	33	10	560	550	30×20×4	8	65	71	20	660
20-/280	2818	110	3085	65	155	240	205	46	520	500	263	33	10	560	550	30×20×4	8	65	71	20	660

Dimensions of the shaft stub from the motor [mm]

Motor	d	l
80	19	40
90 L	24	50
90 S	24	50

MKY

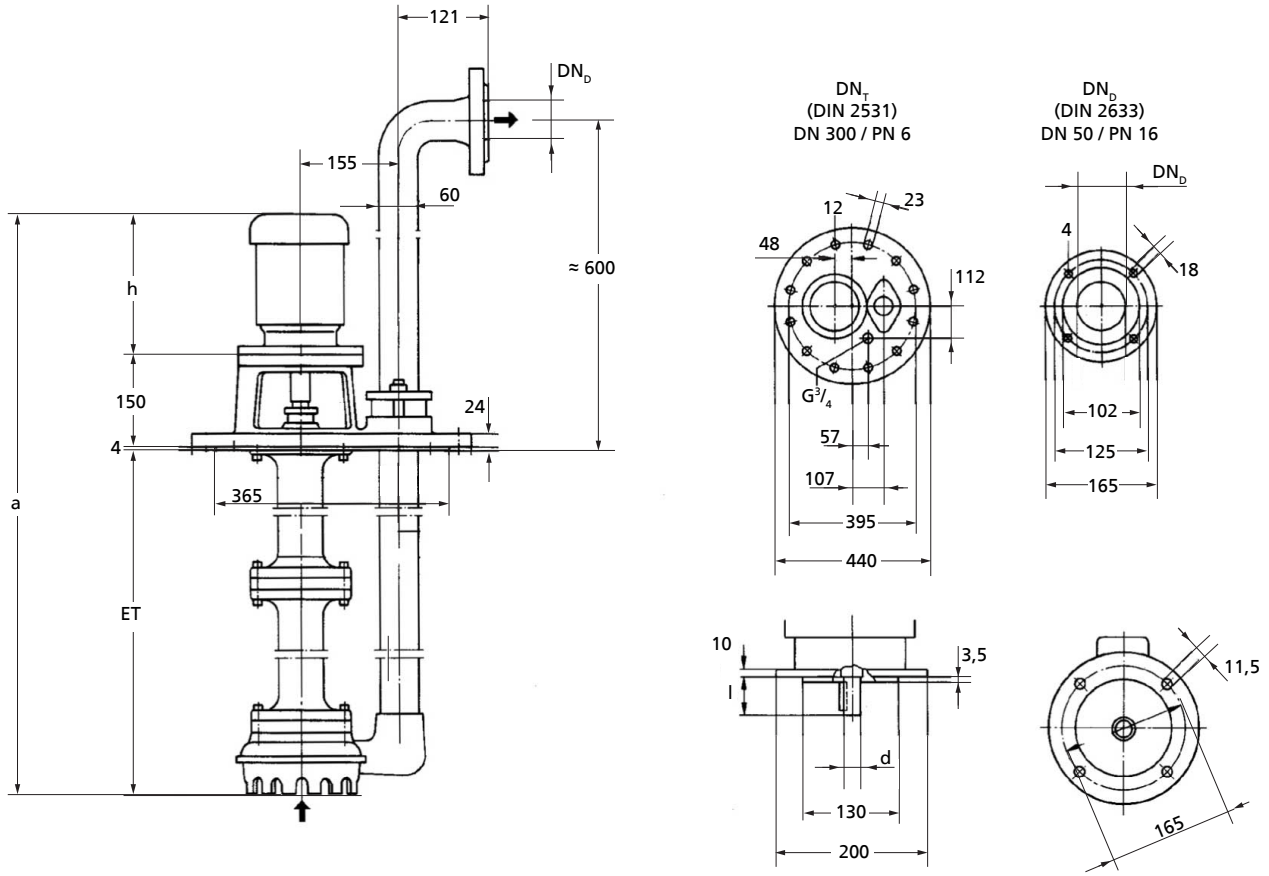

Dimensions

ET	Installation depth

Dimensions [mm]

MKY	ET	a[5)]	h[5)]
20-1 - 4/100	1000	1381	227
20-1 - 4/190	1907	2288	227
20-1 - 4/280	2814	3195	227
20-5/100	1000	1397	243
20-5/190	1907	2304	243
20-5/280	2814	3211	243

5) Dimension depends on the motor make

MKY	ET	a[5)]	h[5)]
20-6/100	1000	1422	268
20-6/190	1907	2399	268
20-6/280	2814	3236	268

Dimensions of the shaft stub from the motor [mm]

Motor	d	l
80	19	40
90 L	24	50
90 S	24	50

Accessories

Lubrication equipment (optional)

Technical data (⇨ Page 5)

	Description	MK, MKA, MKY				[kg]
		MK	MKA	MKY	...	
	Internal lubrication by fluid handled	-	-	-	20-/100	-
		✘	✘	-	20-/190	0.3
		✘	✘	-	20-/280	0.3
	Lubrication by external fluid	✘	✘	-	20-/100	0.5
		✘	✘	-	20-/190	0.6
		✘	✘	-	20-/280	0.7
	Grease lubrication device	✘	✘	-	20-/100	0.8
		✘	✘	-	20-/190	0.9
		✘	✘	-	20-/280	1

Pump accessories

Technical data

	Item	Description	Connection	Mat. No.	[kg]
	P10	RK swing check valve Plastic, EN 12 050-4, with internal thread ISO 7/1, full port and drain plug; cannot be used for pumped drainage	Rp 2	01009773	0.5
	P10	Swing check valve ISO 7/1, made of gunmetal (225 °C max.)	Rp 2	00430260	2.5
	P11	Socket gate valve CuZn PN 10-12 DIN 3352 With internal/internal thread and full port	Rp 2	00411503	1.1

5) Dimension depends on the motor make